LED LINEAR HIGHBAY

MODEL: LHBSL155WUCCTW

SKU: 900075UCCTW

LED LINEAR HIGH BAY

ELAKEVIEW ENTERPRISE LTD.

PRODUCT DESCRIPTION

The Elakeview LED Linear Highbay provides high lumen efficacy and energy savings to projects in high ceiling applications. This highbay is an excellent energy efficient replacement for HID or fluorescent fixture.

HIGHLIGHTS

- DLC Premium Listed
- AC120-347V Class2 0-10V Dimming Driver, 4/6KV surge protector, w/overtemperature protection
- 4000K/5000K Selectable
- 135/155/185W Selectable
- CRI>80
- Efficacy-155LM/W
- Receptacle for Microwave Dimming Sensor (Sensor Sold Separately)
- Wire guard available
- Damp location rated
- L70 - 100,000 hours
- Mounting V-Hooks provided.
- Optional pendant mount
- 5 Year warranty. Extended Warranty Available

APPLICATIONS

Designed for manufacturing, industrial, shops, corridor, garage, gymnasium, office, retail and warehouse applications.

ORDERING INFORMATION

ORDER SKU	DLC MODEL #	COLOR RENDERING INDEX (CRI)	INPUT VOLTAGE	POWER (W)	EFFICACY (LMW)	DELIVERED LUMENS	CCT(K)	FINISH	SIZE
900075UCCTW	LHBSL155WUCCTW	81	AC120-347V	135/155/185	155	20925-29735	4000/5000	White	1.9FT
900073UCCTW	LHBSL92WUCCTW	81	AC120-347V	78/92/115	155	12012-17365	4000/5000	White	1.4FT
900077UCCTW	LHBSL230WUCCTW	81	AC120-347V	200/230/270	155	30800-40770	4000/5000	White	2.6FT

REV 1

PHONE: 416-493-6888 | 416-623-6408 FAX: 416-493-8881
ADDRESS: 616-618-620 Gordon Baker Rd, Toronto, Ontario, Canada, M2H3B4

LED LINEAR HIGH BAY

ELAKEVIEW ENTERPRISE LTD.

PRODUCT FEATURE

- AC120-347V Class2 0-10V Dimming Driver, 4/6KV surge protector, w/overtemperature protection
- Tool-Less Hinged bottom LED Driver
- High LMW (Lumen per watt) LM80 Approved Seoul LED's
- Receptacle for Microwave Dimming Sensor(Sensor Sold Separately)
- Die formed of 24 gauge cold-rolled steel body.
- All steel surface are painted after fabrication with high gloss baked white matte power painted.
- 2 x Mounting hooks included.
- Damp Location rated.
- UL/cUL Listed, RoHS Compliant, Design Lights Consortium (DLC) Qualified Products List
- 5 years warranty, 100,000hrs Lifespan, Extended warranty terms available

PRODUCT SPECIFICATIONS

LED TYPE	WATTS	SYSTEM EFFICACY	LUMENS	COLOR TEMP	BEAM ANGLE	CRI	VOLTAGE	POWER FREQ	POWER EFFICIENCY	POWER FACTOR	THD
SEOUL	135/155/185	155LMW	20925-29735	4000/5000K	120°	>80	120-347V	60HZ	99%	>.90	< 10%

DIMENSIONS

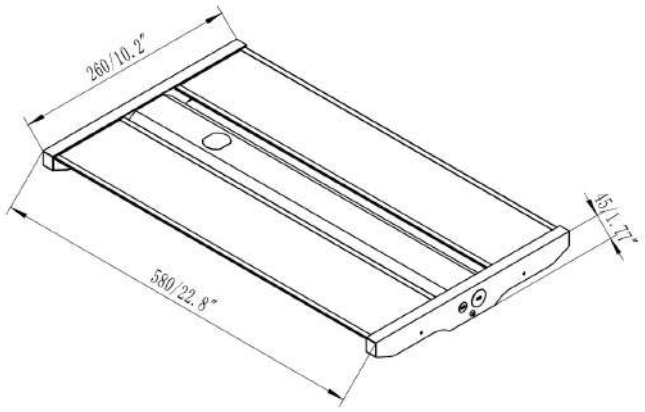

MOUNTING OPTIONS

V-Hooks provided

Optional Pendant Mount

OPTIONAL ACCESSORIES

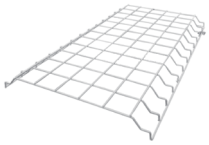

WIREGUARD	
SKU	LHWG160W

Microwave Dimming Sensor	
SKU	HD06VCHR3

REV 1

PHONE: 416-493-6888 | 416-623-6408 FAX: 416-493-8881
ADDRESS: 616-618-620 Gordon Baker Rd, Toronto, Ontario, Canada, M2H3B4

LED LINEAR HIGH BAY

ELAKEVIEW ENTERPRISE LTD.

POLAR CANDELA DISTRIBUTION

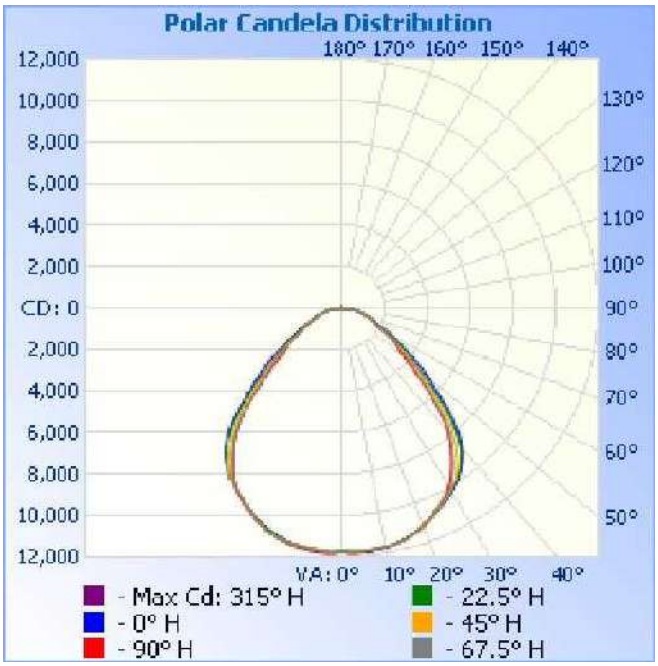

ISOCANDELA PLOT

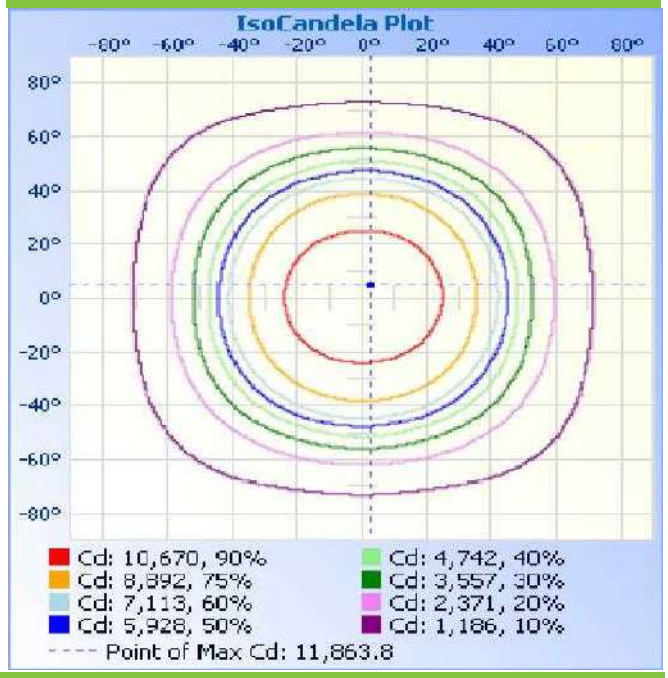

INTERGRATING SPHERE TEST

ANSI/IES TM-30-18 Color Rendition Report

Source:	BXEN-(A)E-21L-3C	**Manufacturer:**	Jiangsu Ever-tie Lighting Inc
Date:	1/7/2023	**Model:**	ETLB5A2-1.9/2/PP/185/155/135/RD1 /CCT/3/AU1/F1/A3/B7/SN/EMN

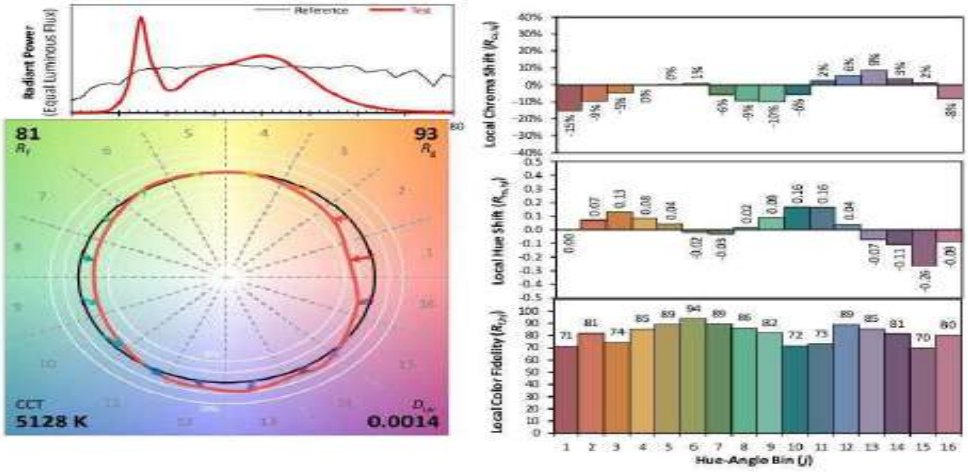

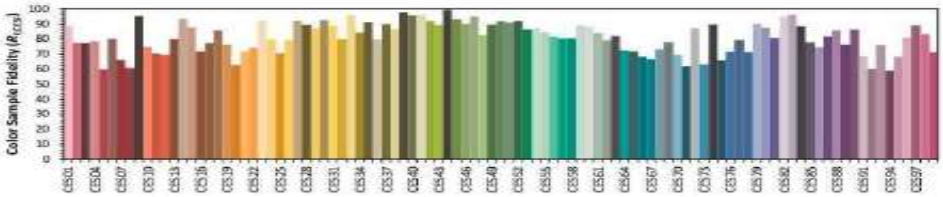

Notes: This is a recommended method for displaying ANSI/IES TM-30-18 information.

x	0.3418
y	0.3517
u'	0.2092
v'	0.4842

CIE 13.3-1995 (CRI)	
R_a	81
R_9	-9

Colors are for visual orientation purposes only. Created with the ANSI/IES TM-30-18 Calculator Version 2.00.

REV 1

PHONE: 416-493-6888 | 416-623-6408 FAX: 416-493-8881
ADDRESS: 616-618-620 Gordon Baker Rd, Toronto, Ontario, Canada, M2H3B4