PRODUCT:	Maelstrom	PROJECT:	PDT-MAC-BL	DATE:	2021-07-31

DESCRIPTION

FEATURES

IP RATING:	DAMP
WEATHER RESISTANT POWDER COATING:	N/A
DAYLIGHT SENSOR:	N/A
FINISHES:	Matte Black
DIMMABLE:	Yes
5-YEAR WARRANTY:	3 Years
LIGHT SOURCE:	Integrated LED

SPECIFICATIONS

COLOR TEMPERATURE (K):	2700-3500-4500
WATTAGE (W):	25w
VOLTAGE (V):	120v
CRI:	80+
DIMMING:	Yes
FINISHES:	Black (Avail. Chrome)
PRODUCT DIMENSION:	D: [redacted] L: 58cm W: 58cm H: 182.9 c
RATED LIFE (Y):	50 000 hours
CONSTRUCTION:	Aluminum
MOUNTING:	Included

CERTIFICATIONS

Model & Size	CRI	Kelvins	Watts	LED Lumens	Delivered
PDT-MAC-BL	80+	2700-3500-4500	25	1700	1400

TECHNICAL DRAWING

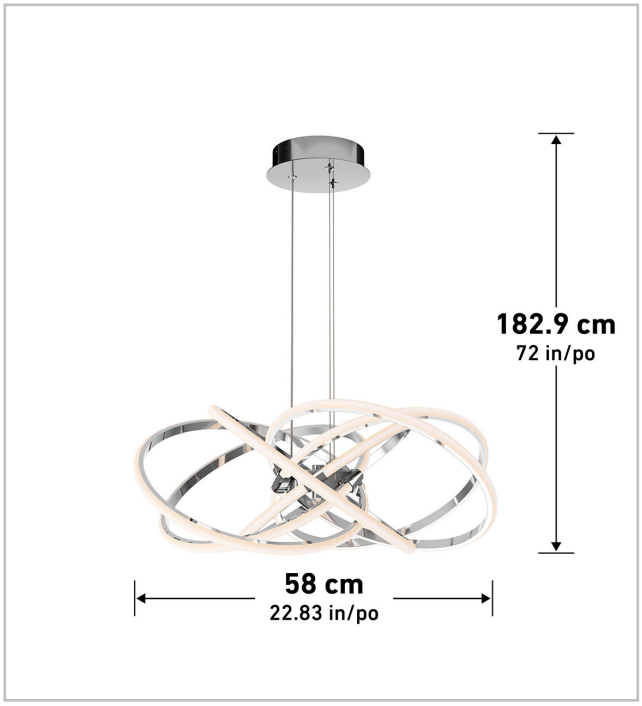

NOTES:

ETL Certified

STAMP

Artika reserves the right to modify its products from time to time as part of our continuous improvement program.

Service & products for professionals.
Service & produits pour professionnels.
Servicio & productos para profesionales.

+1-866-661-9606 ***opt. 2***
pro@artika.com
www.artika.com/pro

artika pro
1756 50th ave, Lachine, QC H8T 2V5, Canada