PRODUCT:	Vivaldi 1L pendant 3 CCT Black	PART#	PDT1-VIC-HD2BL	DATE:	2022

DESCRIPTION

FEATURES

LOCATION:	DAMP
WEATHER RESISTANT POWDER	N/A
COATING: DAYLIGHT SENSOR:	N/A
FINISHES:	Matte Black
DIMMABLE:	YES
5-YEAR WARRANTY:	YES
LIGHT SOURCE:	INTEGRATED LED

SPECIFICATIONS

COLOR TEMPERATURE (K):	3000K-4000K-5000K switcl
WATTAGE (W):	12W
VOLTAGE (V):	120V
CRI:	80+
DIMMING:	ELV TRIAC
FINISHES:	Matte black
PRODUCT DIMENSION:	D: [redacted] L: W: H: 80.5"
RATED LIFE (Y):	50,000 Hours
CONSTRUCTION:	ALUMINUM, PLASTIC
MOUNTING:	HARDWIRED, CEILING MC

CERTIFICATIONS

TECHNICAL DRAWING

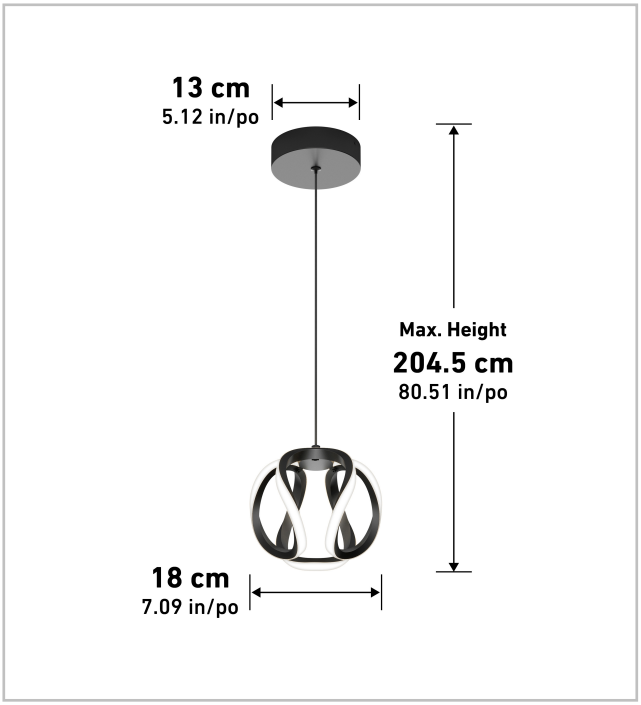

Model & Size	CRI	Kelvins	Watts	LED Lumens	Delivered
PDT1-VIC-HD2BL	80+	3-4-5K	12	N/A	800L

NOTES:

CCT SWITCH, ADJUSTABLE HEIGHT, ETL LISTED

STAMP

Artika reserves the right to modify its products from time to time as part of our continuous improvement program.

Service & products for professionals.
Service & produits pour professionnels.
Servicio & productos para profesionales.

+1-866-661-9606 ***opt. 2***
pro@artika.com
www.artika.com/pro

artika pro
1756 50th ave, Lachine, QC H8T 2V5, Canada