PRODUCT:	HOLT CEILING LIGHT W/O BULBS	PROJECT:	FM-HLT	DATE:	2022

DESCRIPTION

FEATURES

IP RATING:	N/A
WEATHER RESISTANT POWDER COATING:	N/A
DAYLIGHT SENSOR:	N/A
FINISHES:	Black and Gold
DIMMABLE:	Yes
5-YEAR WARRANTY:	5 yr
LIGHT SOURCE:	ST58 E26 (bulbs not inclu

SPECIFICATIONS

COLOR TEMPERATURE (K):	N/A
WATTAGE (W):	40W Max. Per Bulb
VOLTAGE (V):	120
CRI:	N/A
DIMMING:	N/A
FINISHES:	Black and Gold
PRODUCT DIMENSION:	D: [redacted] L: 15" W: 15" H: 7.4"
RATED LIFE (Y):	N/A
CONSTRUCTION:	Steel
MOUNTING:	Wall Mounting, Hardwired

CERTIFICATIONS

TECHNICAL DRAWING

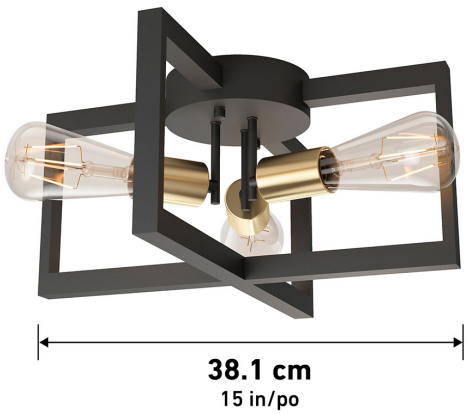

Model & Size	CRI	Kelvins	Watts	LED Lumens	Delivered
FM-HLT	N/A	N/A	40W/B	N/A	N/A

NOTES:

3x E26 ST58 LED BULBS (NON INCLUDED)

STAMP

Artika reserves the right to modify its products from time to time as part of our continuous improvement program.