PRODUCT:	OUT-NEC-SS NEO LED SCONCE SS	PROJECT:	ARTIKA	DATE:	2022

DESCRIPTION

FEATURES

IP RATING:	N/A (WET LOCATION)
WEATHER RESISTANT POWDER COATING:	YES
DAYLIGHT SENSOR:	NO
FINISHES:	BLACK, STAINLESS
DIMMABLE:	YES
5-YEAR WARRANTY:	YES
LIGHT SOURCE:	INTEGRATED LED

SPECIFICATIONS

COLOR TEMPERATURE (K):	3000-4000-5000K
WATTAGE (W):	9W
VOLTAGE (V):	120V
CRI:	90+
DIMMING:	ELV TRIAC (100-20%)
FINISHES:	BLACK, STAINLESS
PRODUCT DIMENSION:	D: [redacted] L: 4.72" W: 4.69" H: 5.12"
RATED LIFE (Y):	50,000 Hours
CONSTRUCTION:	Steel
MOUNTING:	Wall Mounted, hardwired

CERTIFICATIONS

TECHNICAL DRAWING

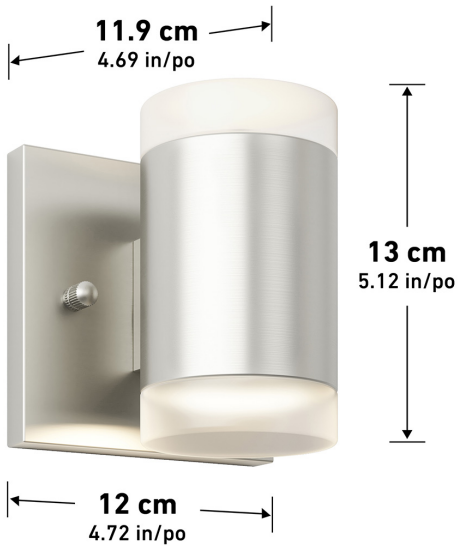

Model & Size	CRI	Kelvins	Watts	LED Lumens	Delivered
OUT-NEC-SS	90+	3-4-5K	9W	N/A	600L

NOTES:

JA8 (Title 24) Compliant

STAMP

California Energy Commission JA8 T24 COMPLIANT

Artika reserves the right to modify its products from time to time as part of our continuous improvement program.

Service & products for professionals.
Service & produits pour professionnels.
Servicio & productos para profesionales.

+1-866-661-9606 ***opt. 2***
pro@artika.com
www.artika.com/pro

artika pro
1756 50th ave, Lachine, QC H8T 2V5, Canada