PRODUCT:	Long Yale Pendant (Black/Gold) without bulbs	PROJECT:	ARTIKA	DATE:	2022

DESCRIPTION

FEATURES

IP RATING:	N/A
WEATHER RESISTANT POWDER COATING:	N/A
DAYLIGHT SENSOR:	N/A
FINISHES:	BLACK & GOLD
DIMMABLE:	N/A
5-YEAR WARRANTY:	YES
LIGHT SOURCE:	5 x ST58 E26 BULB

SPECIFICATIONS

COLOR TEMPERATURE (K):	N/A
WATTAGE (W):	40W/BULB MAX
VOLTAGE (V):	120
CRI:	80+
DIMMING:	TRIAC
FINISHES:	BLK & GOLD
PRODUCT DIMENSION:	D: [redacted] L: 35.9in W: 5in H: 62in
RATED LIFE (Y):	NA
CONSTRUCTION:	STEEL
MOUNTING:	HARDWIRED

CERTIFICATIONS

TECHNICAL DRAWING

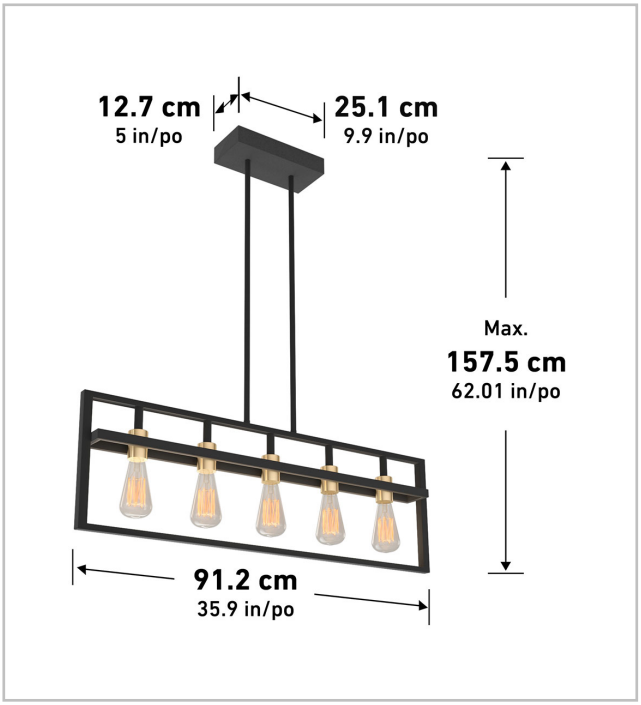

Model & Size	CRI	Kelvins	Watts	LED Lumens	Delivered
PDT-YAL	N/A	N/A	200	N/A	N/A

NOTES:

REQUIRED 5 x ST58 E26 BULBS, ADJUSTABLE HEIG

STAMP

Artika reserves the right to modify its products from time to time as part of our continuous improvement program.