PRODUCT:	VAN-VE-MB VESTER LED VANITY LIGHT	PROJECT:		DATE:	2022

DESCRIPTION

FEATURES

IP RATING:	DAMP
WEATHER RESISTANT POWDER COATING:	NA
DAYLIGHT SENSOR:	NA
FINISHES:	Matte Black
DIMMABLE:	Yes
5-YEAR WARRANTY:	Yes
LIGHT SOURCE:	Integrated LED

SPECIFICATIONS

COLOR TEMPERATURE (K):	3000K
WATTAGE (W):	21W
VOLTAGE (V):	120V
CRI:	80+
DIMMING:	Yes
FINISHES:	Matte Black
PRODUCT DIMENSION:	D: [redacted] L: 27in W: 4.36in H: 4.4in
RATED LIFE (Y):	5 Years (50 000hrs)
CONSTRUCTION:	Steel & Plastic
MOUNTING:	Included

CERTIFICATIONS

TECHNICAL DRAWING

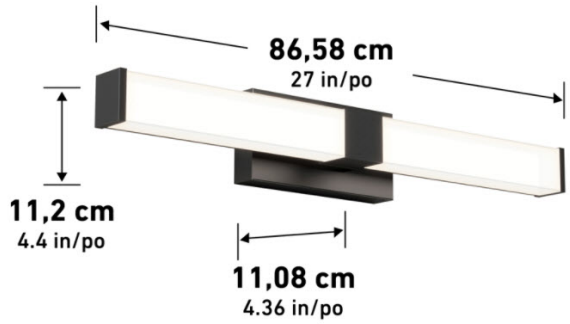

Model & Size	CRI	Kelvins	Watts	LED Lumens	Delivered
VAN-VE-MB	80+	3000	21		1900

NOTES:

ETL Certified

STAMP

Artika reserves the right to modify its products from time to time as part of our continuous improvement program.