PRODUCT:	Vitoro Vanity Chrome	PROJECT:	VAN-VI-CR	DATE:	2022

DESCRIPTION

FEATURES

IP RATING:	DAMP
WEATHER RESISTANT POWDER COATING:	N/A
DAYLIGHT SENSOR:	N/A
FINISHES:	Chrome / Matte Black
DIMMABLE:	YES
5-YEAR WARRANTY:	YES
LIGHT SOURCE:	Integrated LED

SPECIFICATIONS

COLOR TEMPERATURE (K):	3000K
WATTAGE (W):	21
VOLTAGE (V):	120v
CRI:	80+
DIMMING:	Triac
FINISHES:	Chrome / Matte Black
PRODUCT DIMENSION:	D: [redacted] L: 27" W: 4.25 H: 4.33
RATED LIFE (Y):	50,000 Hours
CONSTRUCTION:	Steel & POLYCARBONATE
MOUNTING:	INCLUDED

CERTIFICATIONS

TECHNICAL DRAWING

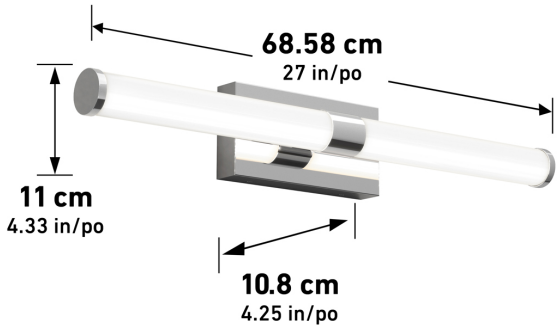

Model & Size	CRI	Kelvins	Watts	LED Lumens	Delivered
VAN-VI-MB	80+	3000k	21		2200 Lm

NOTES:

ETL certified

STAMP

Artika reserves the right to modify its products from time to time as part of our continuous improvement program.