CSCLED

ORDER CODE: PLBX14-SK

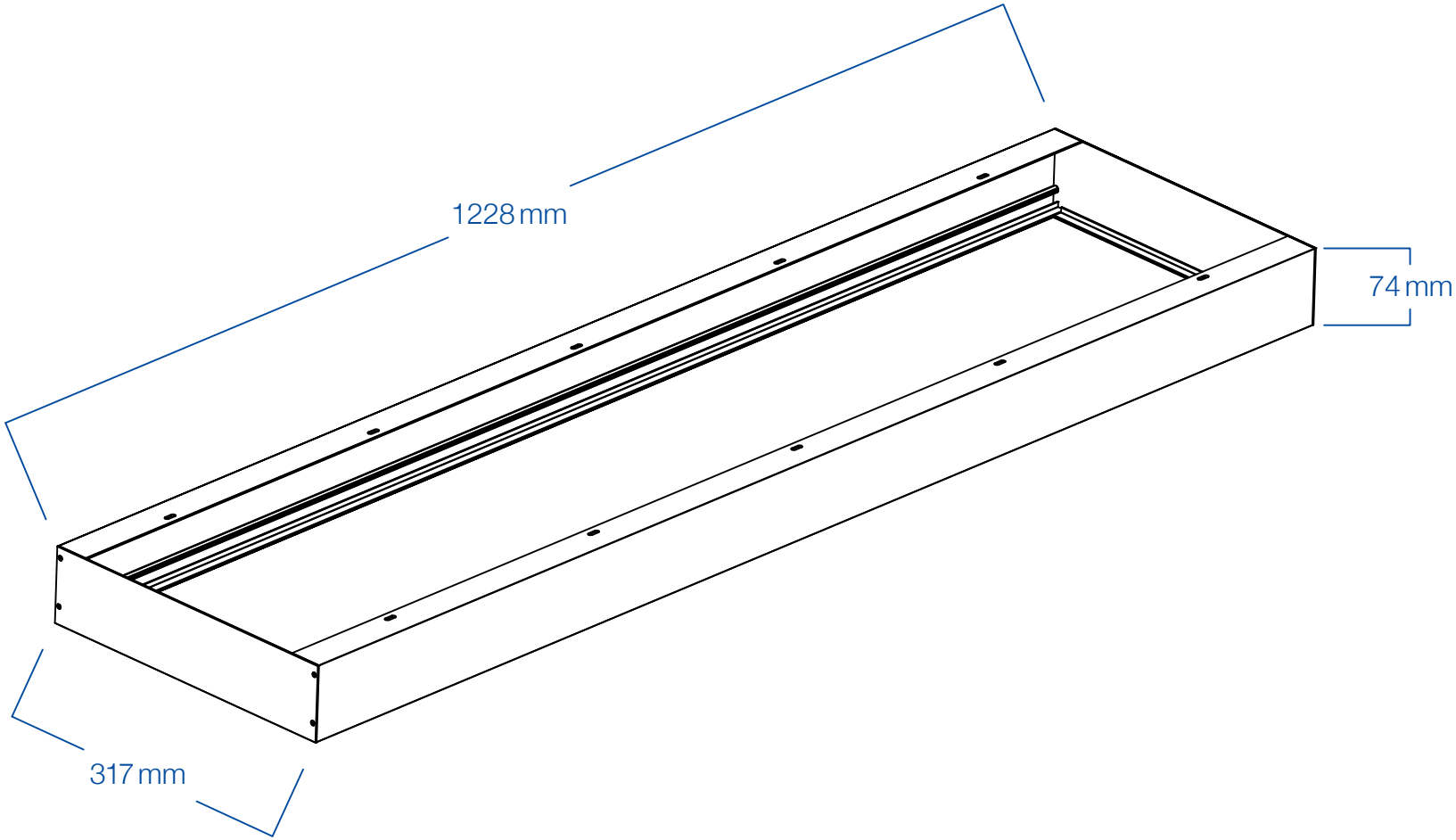

Surface Kit
for 1'x4' PLB Backlit Panels

www.csc-led.com