CSCLED

ORDER CODE: PLBX24-SK

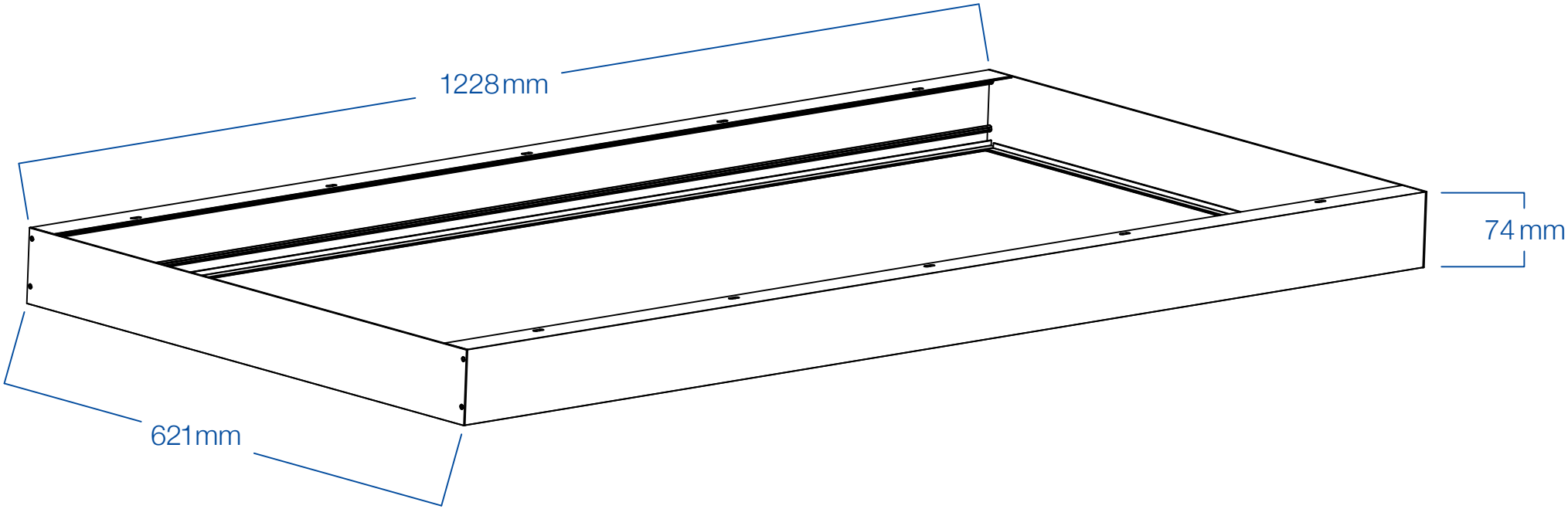

Surface Kit
for 2'x4' PLB Backlit Panels

www.csc-led.com