TEL 905.695.2055 **toll free** 1.800.660.5391
FAX 905.695.2056 **toll free** 1.800.660.5390

33 West Beaver Creek Road Richmond Hill, Ontario Canada L4B 1L8

28715-30, AMIGO 3" ROUND TRIMLESS DOWNLIGHT,15W LED

PRODUCT DETAILS

No.	:	28715-30-024
Product Color	:	BLACK
Diameter	:	2.75"
Height	:	4.125"
Weight	:	1.6lbs

LIGHT SOURCE DETAILS

Light Source Type	:	INTEGRATED LED
Input Voltage	:	120V/277VV
Bulb Voltage	:	120V
Socket Type	:	LED
Total Wattage	:	15W
Total Lumen	:	1290lm
Kelvin	:	3000K
CRI	:	90
Dimmable	:	Yes

Options Available

ITEM NO.	FINISH	SHADE
28715-30-016	WHITE	
28715-30-024	BLACK	

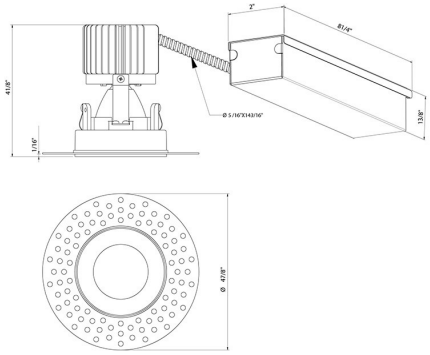

TECHNICAL DETAILS

Light Direction	:	Down
Adjustable Lamp Head	:	No
Location	:	DRY
Approval	:	
Title 24	:	Yes
Beam Angle	:	40
Cut Hole Diameter	:	3"

PROJECT INFORMATION

Job Name: _____ Date: _____ Type: _____

Comments: _____