EUROfase INC.

TEL 905.695.2055 **toll free** 1.800.660.5391
FAX 905.695.2056 **toll free** 1.800.660.5390

33 West Beaver Creek Road Richmond Hill, Ontario Canada L4B 1L8

TE02, 3-INCH REFLECTOR TRIM

PRODUCT DETAILS

No.	:	TE02-45
Product Color	:	WHITE
Shade / Accent Colour	:	BLACK
Diameter	:	3.875"
Height	:	1.625"
Weight	:	0.2lbs

LIGHT SOURCE DETAILS

Number of Bulbs	:	1 / 1
Light Source	:	Halogen / Halogen
Light Source Type	:	MR16 / GU10
Input Voltage	:	120 / 120V
Bulb Voltage	:	12 / 120V
Socket Type	:	/
Wattage	:	50 / 50W
Total Wattage	:	50 / 50W
Bulb Included	:	No / No
Dimmable	:	Yes / Yes

TECHNICAL DETAILS

Location	:	DRY
Approval	:	
Vertical Adjustment	:	15
Cut Hole Diameter	:	3.25"

Options Available

ITEM NO.	FINISH	SHADE
TE02-45	WHITE	BLACK
TE02-49	WHITE	CHROME
TE02-93	SATIN NICKEL	CHROME

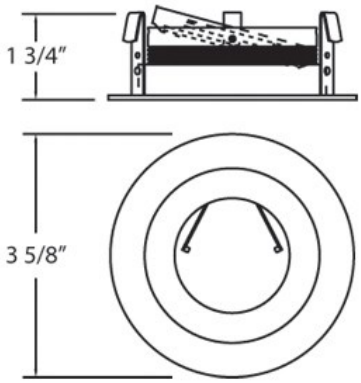

PROJECT INFORMATION

Job Name: _____ Date: _____ Type: _____

Comments: _____