FAN REMOTE WALL CONTROL

MODEL:UC72080T

WARNING! SHUT OFF THE POWER WITH FUSE OR CIRCUIT BREAKER.

NOTE: The frequencies on the Receiver and Transmitter have been preset at the factory. Before installing the Receiver, make sure the dip switches on the Receiver are set to the same position as on the Transmitter (FIG.1). The dip switches on the Transmitter are located on one side of the control.

1. SAFETY PRECAUTIONS:

- WARNING: HIGH VOLTAGE: Disconnect the electric power source by removing fuse or switching off circuit breakers.
- Do not use with solid state fans.
- Electrical wiring must meet all local and national electrical code requirements.
- Electrical source and fan must be 115/120 volt, 60Hz. Maximum fan motor amps: 1.0. Maximum light watts: 300-incandescent only.
- Household electric power can cause serious injury or death.

NOTE: BEFORE INSTALLATION OF THE NEW REMOTE CONTROL, MAKE SURE THE FAN IS SET TO THE HIGHEST SPEED.

2. INSTALLING THE RECEIVER (FIG.2)

a. Remove the ceiling fan canopy from the mounting bracket.
b. Disconnect the existing wiring between ceiling fan and the junction box.

3. CONNECTING THE RECEIVER

Use the wire nuts provided and make electrical connections as follows:
a. Connect Green wire from fan to the Bare copper (ground) from junction box.
b. Connect Black wire (AC IN L) from the Receiver to the Black wire from the junction box.
c. Connect White wire (AC IN N) from the Receiver to the White wire from junction box.
d. Connect White wire (TO MOTOR N) from the Receiver to the White wire from fan.
e. Connect Black or Red wire (TO MOTOR L) from the Receiver to the Black or Red wire from fan.
f. Connect Blue wire (FOR DOWN LIGHT) from the Receiver to the Blue wire from fan.
g. After wires are connected, carefully tuck them into the junction box.
h. Lay the black antenna wire on top of the Receiver and insert into the mounting bracket.
i. Reinstall the canopy onto the mounting bracket.

4. INSTALLING THE CONTROL SYSTEM WALL PLATE

Select a location to install your control system transmitter. You can replace the existing wall switch or install the transmitter on ANY flat surface.
Option 1: Install the control system by using an existing wall switch outlet box. Make sure the electric power is TURNED OFF at the main panel before continuing.
Step.1. Remove the existing wall plate and the old switch from the wall outlet box. Wire nut the BLACK leads (hot) together and push back inside the outlet box.
Step.2. Attach the metal plate and wall plate to the existing wall outlet box with 4 screws provided. Then place the plastic plugs into the wall plate. (FIG.3)
Option 2: Install the control system on ANY flat surface. Select the desired location and use the wall plate to mark the location for the mounting holes. Plastic wall anchors and screws are provided for this type of installation.

5. INSTALLING THE BATTERY INTO THE TRANSMITTER

Remove the battery compartment cover on the back of the transmitter and insert both batteries provided. Make sure the "+" sigh is facing upwards. (FIG.4)

6. OPERATING THE TRANSMITTER

a. "•••" "••" "•" buttons:
These three buttons are used to select the fan speed.
Press and release the button of the desired speed setting;
"•••"=Highest speed
"••"=Medium speed
"•"=Lowest speed
b. "🚶" button: For down lights on and off.
c. "🚶" Button: This button will turn the light on or off and will also control the brightness setting. Press and release the button and the light will turn on or off. Press and hold the button for the desired brightness. The light will cycle continuously between bright and dim settings as long as the button is held down. The light key has auto resume, it will stay at the same brightness as last time when it was turned off.
d. "⏻" This button will turn the fan off.
e. Memory function
If you turn off the fan or light by wall control, it will memorize and recover automatically to last time's fan speed and light brightness when turned on next time.
f. This remote control is equipped with 16 code combinations to prevent possible interference from other remote units such as garage door openers, car alarm or securtly systems, If your fan or light kit goes on and off without using the remote control, simply change the combination code in your Transmitter and Receiver.

7. TROUBLE SHOOTING GUIDE

Q. Fails to operate
A. Make sure all connections on the Receiver and Transmitter are correct and no loose wires or wire connections. Make sure fan pull chain is set to the hightest speed. Make sure the code switches set on the Receiver and Transmitter are the same.

CAUTION:

Ceiling Angel Shall Not Exceed 30 Degrees For Mounting Controller.

FCC ID : CHQ7208T
This device complies with part 15 of the FCC rules. Operation is subject to the following two conditions:
(1) This device may not cause harmful interference;
(2) This device must accept any interference received, including interference that may cause undesired operation .

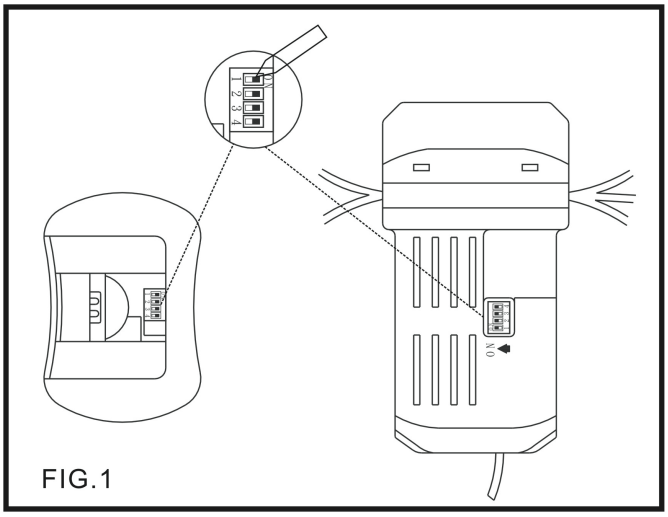

FIG.1

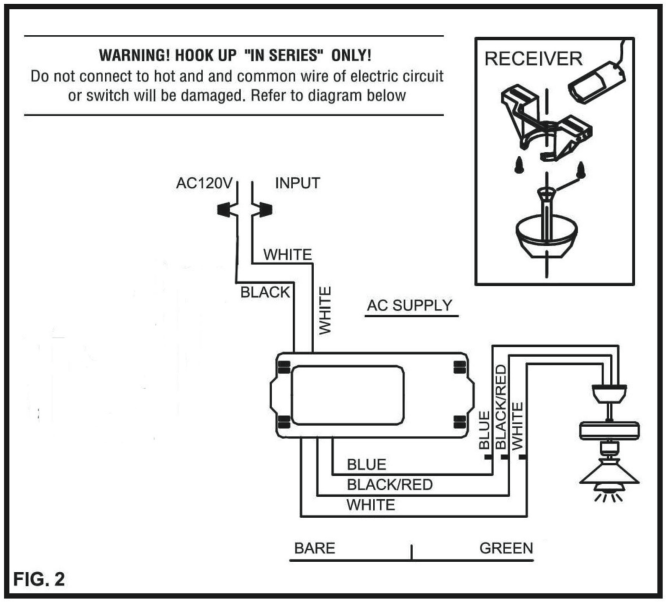

FIG. 2

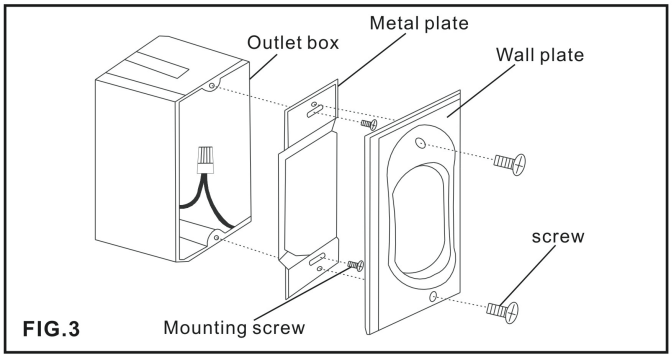

FIG.3

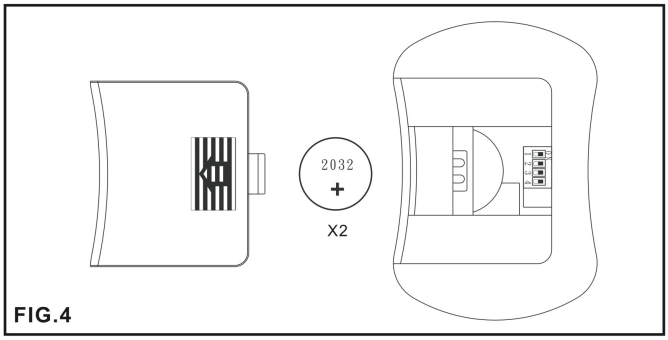

FIG.4