LED Chandelier

CH19234
INSTALLATION SHEET

START FROM HERE

- Make sure power is completely off at the fuse box.
- Have your fixture installed by a qualified licensed electrician
- Prepare everything in a clear area.
- Wear gloves at all times during this installation.
- Read instructions carefully before you start assembly.
- Keep this instruction sheet for future reference.

Technical Support: 1-855-855-8926

Please Note:
- For dimming, a TRIAC or ELV type of dimmer is required.

1. Remove the fixture from its original packaging. Next, remove the mounting plate **(2c)** from the canopy **(3b)** by removing the screws **(3a)**. Attach the mounting plate **(2c)** to the electrical junction box **(2a)** using the two screws **(2d)** provided in the hardware package.

2. Before you mount the canopy to the mounting plate, select the hanging height of the fixture. To decrease the hanging height, first disconnect the wires **(4e)** coming from the hub **(1b)** and the wires **(4a)** from DC Driver and then, remove the extension rods **(1a)** within the connector **(1c)** and the fixture hub **(1b)**.

3. Once the rods are fully connected and wires **(4e)** are pulled into the canopy, connect the wires **(4e)** to the DC Driver by using the wire connector **(4b)** provided (Black to black and white to white).

4. You are now ready to mount the canopy **(3b)** to the mounting plate **(2c)**. First connect all wires from the driver to the wires from the junction box correctly G ground to ground, N neutral wire (white to white), L live wire (black to black) with provided marrettes **(2b)** from the hardware package. Push the canopy **(3b)** up towards the ceiling and secure with the screws **(3a)**.

5. You have now completed the installation of your fixture, enjoy.

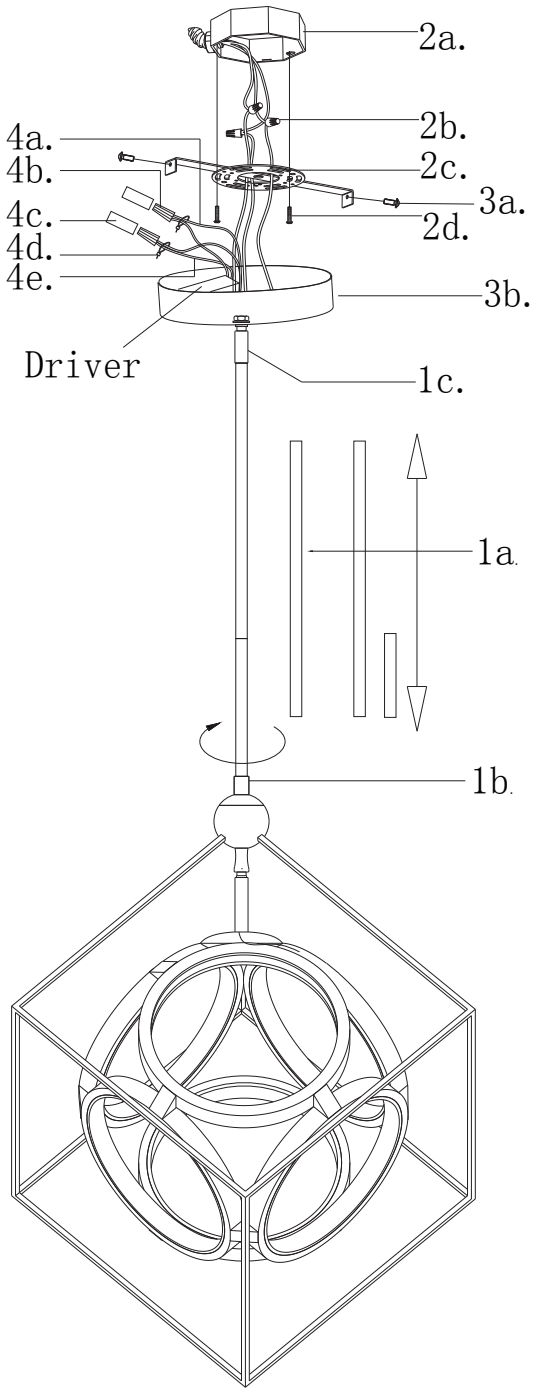

KUZCO
19054 28th Avenue Surrey, BC Canada V3S 6M3
T: 604 538 7162 TF: 1-855 85 KUZCO F: 604 538 7196
W: kuzcolighting.com
20190104