ASSEMBLING & INSTALLATION INSTRUCTIONS

The drawing shown may not exactly match the product enclosed.
However, the installation instructions do apply to this product.

15712

- **WARNING! SHUT POWER OFF AT FUSE OR CIRCUIT BREAKER.**
- **ATTENTION! COUPER LE COURANT AU FUSIBLE OU UN DISJONCTEUR.**

MOUNTING THE FIXTURE (Fig.1)

1. Shut off the power at the circuit breaker box. Remove old fixture and all hardware from Junction Box.
2. Carefully unpack your new fixture and lay out all the parts on a clear area. Take care not to lose any small parts necessary for installation.
3. Thread the two mounting screws about 1/4" into the pre-drilled holes in the mounting plate, spaced about the same distance apart as the holes in the fixture backplane. Attach the mounting plate to the junction box using two junction box screws as shown. **The side of the single bar marked "GND" must face out.** The junction box is not included.
4. Guide fixture wires through hole in center of mounting plate.
5. Follow wiring instructions carefully (see fig.2).
6. Place the fixture body(B) over the mounting plate, aligning the backplane holes with the mounting screws, then lock it securely with the column nuts(A).
7. Install the light bulbs(Not included) in accordance with the fixture's specifications. **NOTE: DO NOT EXCEED THE MAXIMUM WATTAGE RATING!**
8. Raise the end grapnel of the rod crystal(C), hooked to the interior ring's hole of the frame(D). Attach the assembly frame(D) onto the top of fixture body, aligning frame's mounting holes with the back plate's thread holes, lock it with the knur screws(E).

CONNECTING THE WIRES (Fig.2)

1. Connect the electrical wires as follows. Connect the Black wire from the fixture to the black house (hot) Wire. Connect the white wire from the fixture to the white (neutral) house wire. Make sure all wire nuts are secured. You may wrap the connections with electrical tape. If your outlet box has a ground wires (green or bare copper) connect fixture's ground wire to it. Otherwise attach the bare copper fixture wire to the green ground screw on the mounting plate.
2. Tuck the wire connections neatly into the wall junction box.

Your installation is now complete. Return power to the junction box and test the fixture.

FIG.1

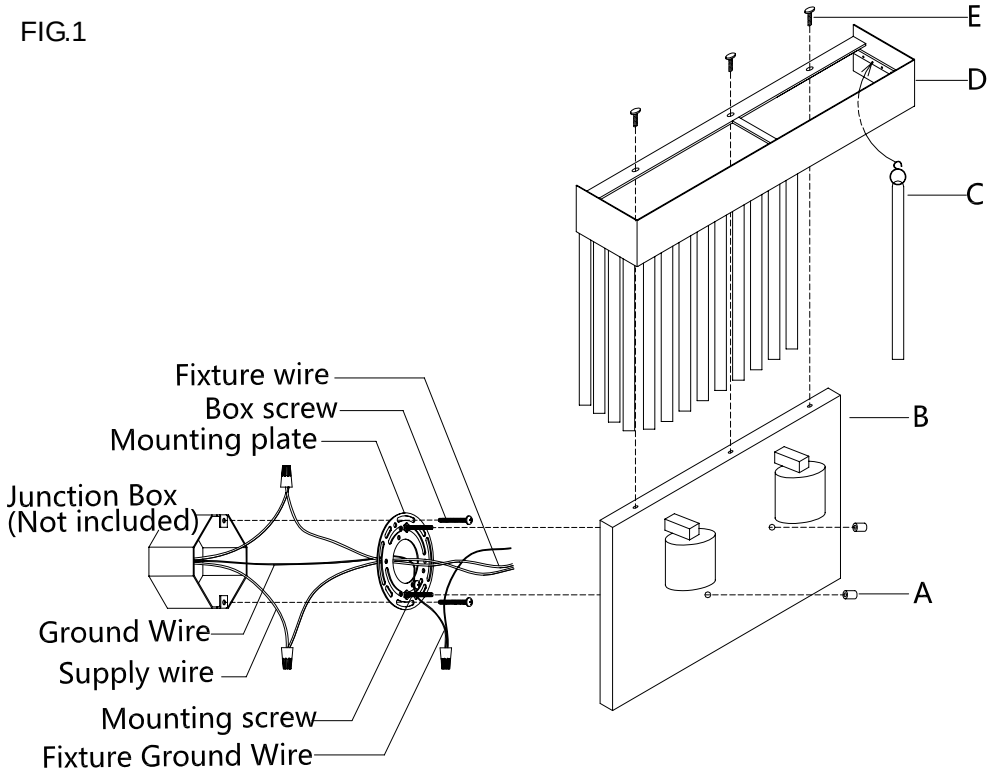

FIG.3

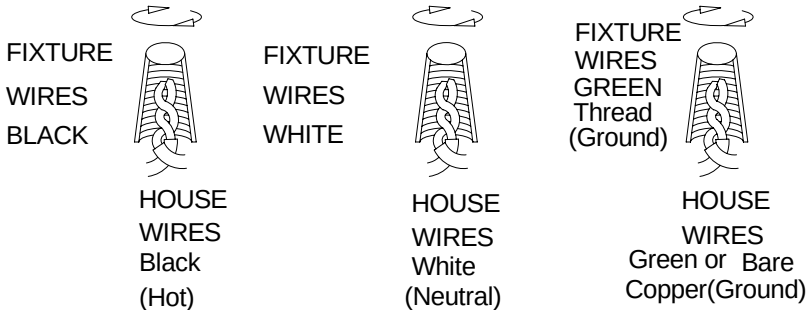

Thank you for purchasing a **LIVEX** product.
Need assistance with parts or assembly? Please call customer service at: **800-761-8056**
Or visit us online at: WWW.LIVEXLIGHTING.COM

©COPYRIGHT ALL RIGHTS RESERVED.**LIVEX** LIGHTING,INC.