MaxLite®

3000K

1 YEAR WARRANTY

PROJECT NAME:_____ CAT. #: _____

NOTES:_____ FIXTURE SCHEDULE:_____

Dusk to Dawn Nightlight

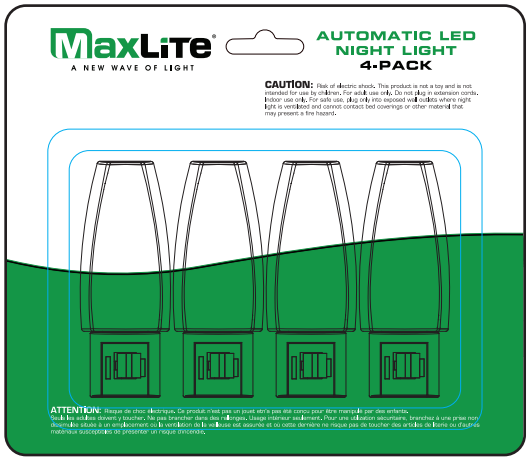

Description:

MaxLite's LED Dusk to Dawn Night Light is the easy and energy-saving way to light your home at night. This plug-in night light features a dusk-to-dawn sensor that automatically turns the light on at night and off during the day. The compact size is perfect for adding small amounts of light to closets, bathrooms and hallways.

Specification

	UNL-DTDS-BP
SPECIFICATION	**DETAILS**
Efficacy (lm/W)	2.0
Lumens (lm)	0.6
Maximum Input Voltage (VAC)	120VAC
Nominal Input Frequency (Hz)	60Hz
Watts	LED 0.3W
Maximum Line Current (Amps)	15A
Color Temperature (K)	3000K
Operating Temperature	32°F to 104°F
Controls	Dusk to Dawn Sensor
Construction	ABS

Dimensions

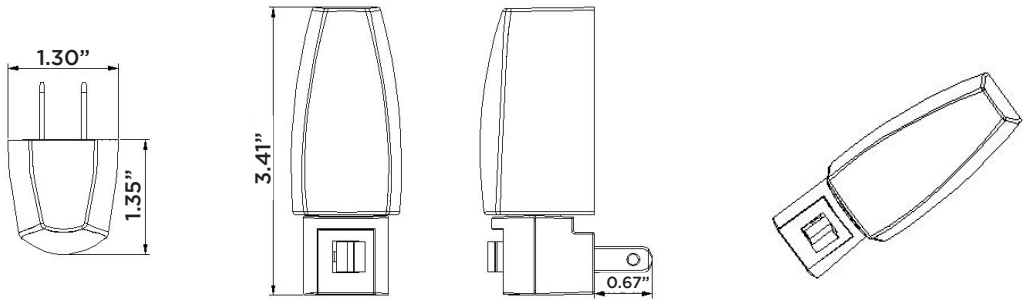

1-year standard warranty (further details available at www.maxlite.com/warranties)

Phone: 1-800-555-5629 | Fax: 973-244-7333 | Web: www.maxlite.com | E-mail: info@maxlite.com | PLM# 600 | Rev: 03/23/21

© 2020 Specifications subject to change without notice.