FL6A-LED230

LED Flood Light

SPECIFICATIONS*	
Watts	226.60
Lumens	31312
Efficacy	138.18
Replaces Up To	750W MH
Colour Temp	4K*, 5K
Certification	cULus, IP65, DLC
Operating Temp	-40˚C to +40˚C
Voltage	120-277*, 347
LED Life	100,000 hours
Housing Material	Aluminum
Lens Material	Polycarbonate
Beam Pattern	T2 - TYPE 2/7HX6V, T3 - TYPE 3/7HX7V, T4 - TYPE 4/7HX7V, T5 - ELONGATED TYPE 5/7HX6V*
Total Harmonic Distortion	11.64
Power Factor	0.937
Mounting Options	Yoke, Slipfit, Wall mount, round and square pole mount

*Standard

DESCRIPTION

The FLA-LED fixtures are high efficacy DLC Premium floods/area lights at an approx efficacy of 140 lumens/watt. These fixtures have a universal mounting system that allows you to order the fixture separately with your choice of mounting system.

APPLICATIONS

Building Facades

Parking Lots

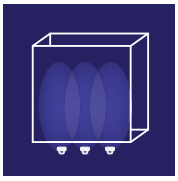

Wall Wash Applications

FEATURES

- Rugged in construction - die cast aluminum housing, polycarbonate lens, IP65 rated for outdoors
- T2 - Type 2/7HX6V, T3 - Type 3/7HX7V, T4 - Type 4/7HX7V, T5 - Elongated Type 5/7HX6V*beam distributions available.
- 0-10V dimming driver is standard

*The above specs apply to the standard product configuration. For spec information on other product configurations please see page 2.
NOTE: Not all of our product configurations are qualified on the DLC QPL. To view all of our DLC qualified products please visit the DLC qualified products list at www.designlights.org/qpl.

OTHER MODEL SPECIFICATIONS

MODEL DESCRIPTION	VOLTAGE (V)	INPUT POWER (W)	LIGHT OUTPUT	EFFICACY (Lm/W)	THD	PF	BUG RATING
FL6A-LED230-B-4K-T5-XXX-DIM	120-277V	226.60	31312	138.18	15	0.9	B5-U0-G3
FL6A-LED230-B-4K-T2-XXX-DIM	120-277V	226.60	31387	138.51	15	0.9	B4-U0-G4
FL6A-LED230-B-4K-T3-XXX-DIM	120-277V	226.60	31312	138.18	15	0.9	B4-U0-G5
FL6A-LED230-B-4K-T4-XXX-DIM	120-277V	226.60	29821	131.60	8.49	0.941	B4-U0-G4
FL6A-LED230-B-5K-T5-XXX-DIM	120-277V	226.60	31312	138.18	15	0.9	B5-U0-G3
FL6A-LED230-B-5K-T2-XXX-DIM	120-277V	226.60	32688	144.26	15	0.9	B4-U0-G4
FL6A-LED230-B-5K-T3-XXX-DIM	120-277V	226.60	31312	138.18	15	0.9	B4-U0-G5
FL6A-LED230-B-5K-T4-XXX-DIM	120-277V	226.60	29821	131.60	15	0.9	B4-U0-G4
FL6A-LED230-C-4K-T5-XXX-DIM	347V	235.40	32456	137.88	15	0.9	B5-U0-G3
FL6A-LED230-C-4K-T2-XXX-DIM	347V	235.40	30911	131.31	15	0.9	B4-U0-G4
FL6A-LED230-C-4K-T3-XXX-DIM	347V	235.40	32456	137.88	15	0.9	B4-U0-G5
FL6A-LED230-C-4K-T4-XXX-DIM	347V	235.40	30911	131.31	15	0.9	B4-U0-G4
FL6A-LED230-C-5K-T5-XXX-DIM	347V	235.40	32456	137.88	15	0.9	B5-U0-G3
FL6A-LED230-C-5K-T2-XXX-DIM	347V	235.40	30911	131.31	15	0.9	B4-U0-G4
FL6A-LED230-C-5K-T3-XXX-DIM	347V	235.40	32456	137.88	15	0.9	B4-U0-G5
FL6A-LED230-C-5K-T4-XXX-DIM	347V	235.40	30911	131.31	15	0.9	B4-U0-G4

LEGEND

B - 120V–277V, C - 347V
4K - 4000K, 5K - 5000K
T2 - TYPE 2/7HX6V, T3 - TYPE 3/7HX7V, T4 - TYPE 4/7HX7V, T5 - ELONGATED TYPE 5/7HX6V*
XXX - HOUSING FINISH
DIM - DIMMABLE

MOUNTING OPTIONS

Yoke Mount

Wall Mount

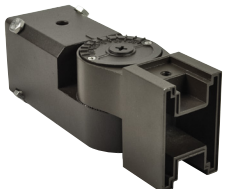

Slip Fit Mount

Round Pole Mount Adaptor Kit**

****To mount on a round pole, purchase the arm for the square pole/wall mount along with the round pole mount adaptor kit. Round pole adaptor kit works with 4", 5", and 6" diameter poles.**

CANDELA PLOTS

FL6A-LED230 TYPE II 7H X 6V

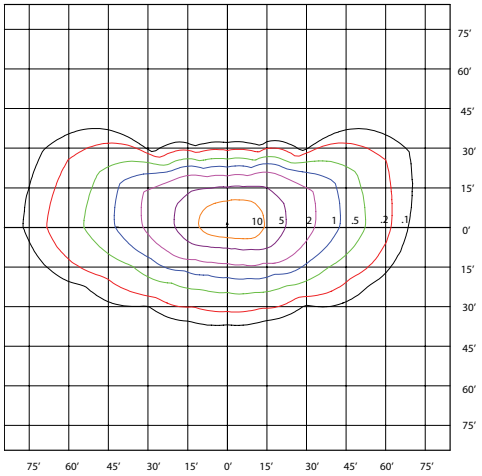

FL6A-LED230 TYPE III 7H X 7V

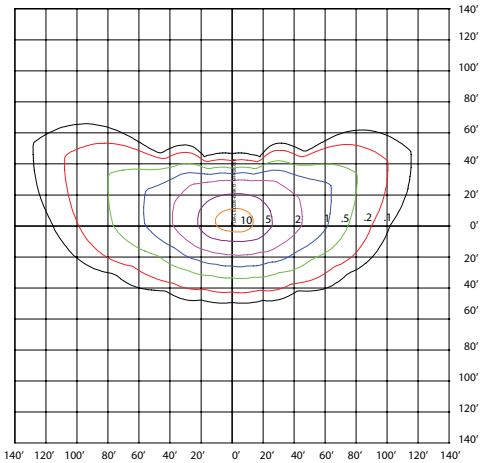

FL6A-LED230 TYPE IV 7H X 7V

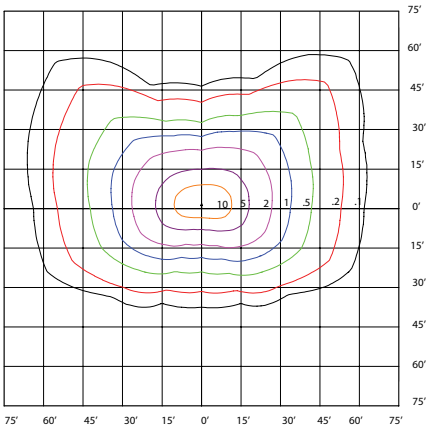

FL6A-LED230 TYPE V 7H X 6V

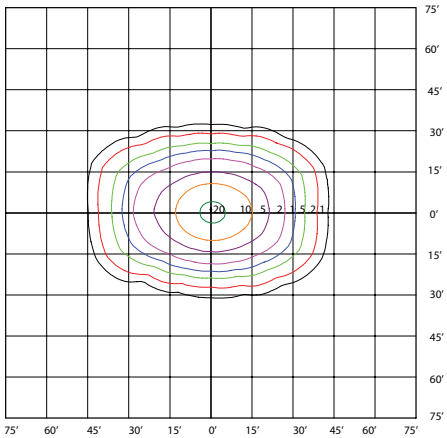

EPA RATING

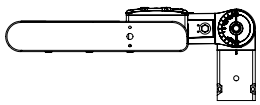

0° TILT:
0.72

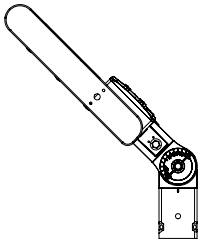

45° TILT:
1.38

90° TILT:
1.94

DIMENSIONS

Slip Fit Mount

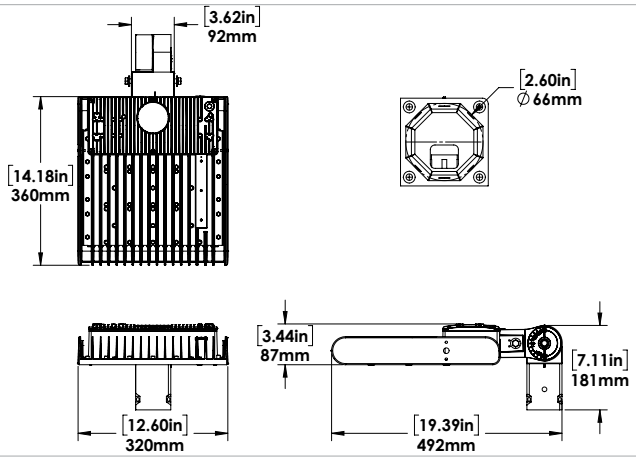

Yoke Mount

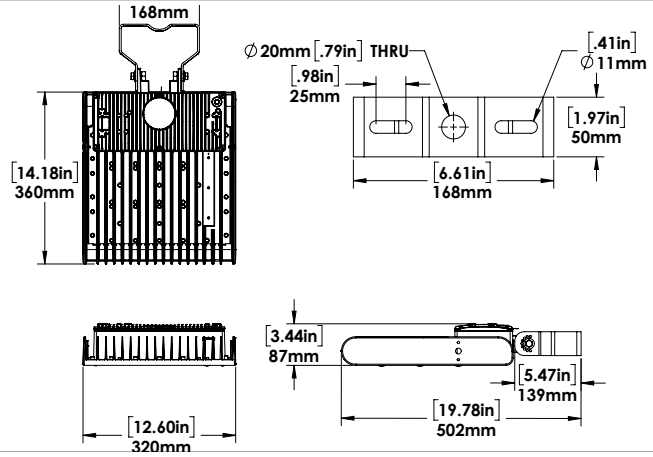

Square Pole /Wall Mount

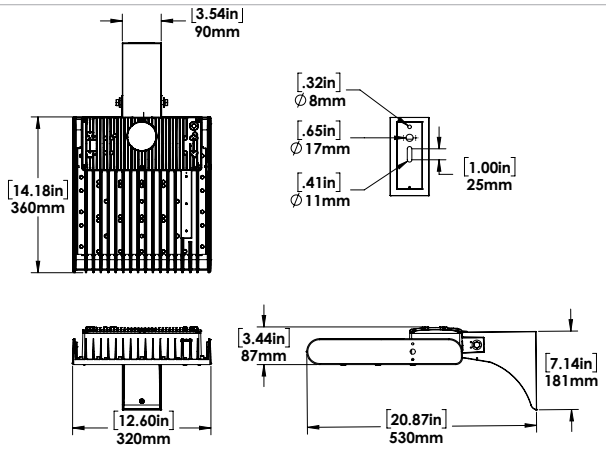

ROUND POLE ADAPTOR KIT

(order with Square pole/wall mount)**

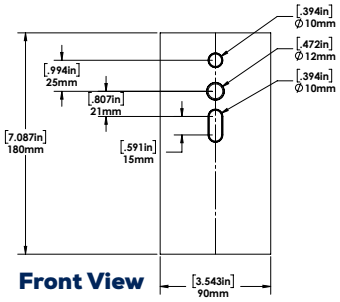

Front View

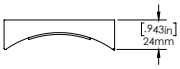

Top View

WORKS FOR

4" 5" 6"

Round pole adaptor kit works with 4",5",and 6" diameter poles.

****To mount fixture on a round pole, purchase the arm for the square pole/wall mount along with the round pole mount adaptor kit.**

ORDERING GUIDE - Fill out steps 1 and 2 to complete your order.

1 STEP 1 - FILL OUT BASE FIXTURE ORDER

FL6A	LED230						
	WATTS	VOLTAGE	COLOUR TEMP.	BEAM	FINISH	DRIVER	OPTIONS
		B - 120 - 277V*	5K - 5000K	T2 - TYPE 2 / 7HX6V	BRZ - BRONZE*	DIM - DIMMABLE DRIVER*	PC-PHOTOCELL
		C - 347V	4K - 4000K*	T3 - TYPE 3 / 7HX7V	CC - CUSTOM		
				T4 - TYPE 4 / 7HX7V			
				T5 - ELONGATED TYPE 5 / 7HX6V*			

2 STEP 2 - CHOOSE YOUR MOUNTING SYSTEM

MOUNTING SYSTEM - FIELD INSTALLED

CHECK THE MOUNTING SYSTEM YOU WISH TO ORDER:

- ☐ Yoke
- ☐ Slip fit for 2 3/8" tenon
- ☐ Arm for square pole/wall mount
- ☐ Round pole adaptor kit for 4", 5", 6" diameter poles**

****To mount fixture on a round pole, purchase the arm for the square pole/wall mount along with the round pole mount adaptor kit.**